EtherCAT: the Ethernet Fieldbus

EtherCAT is the Ethernet-based fieldbus technology for real-time control and measurement applications. Its unique functional principle – processing on the fly – leads to outstanding efficiency and makes it exceptionally fast, yet simple to use and inexpensive.

EtherCAT is used by many Big Science Organizations around the world, including ESO, ESA, DLR, XFEL, ESS, ESRF, EMBL, KIT, PSI, GSI, STFC, NASA, LIGO, GMTO, TMT, GBT, SLAC, RIKEN, LNLS, NRAO, ANSTO, IHEP, IISc, NSRRC, … With over 6600 members the non-commercial EtherCAT Technology Group is the worlds largest fieldbus organization.

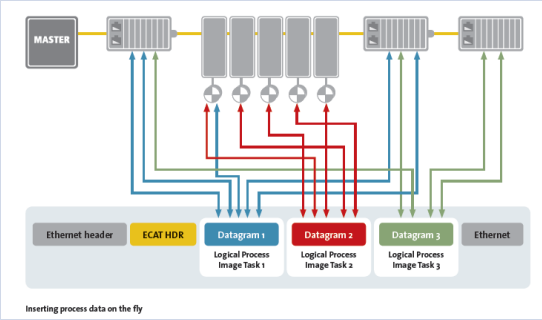

EtherCAT features include:

- Exceptional performance with precise synchronization
- Flexible topology with thousands of nodes, no switches needed
- Hot connect, cable redundancy and master redundancy
- Functional safety (SIL3)
- Power and data on the same cable
- Over 3000 vendors of EtherCAT devices
- Over 70 Million nodes deployed

Technology Transfer proposal BSBF 2022

Original/Potential Field of Application

- EtherCAT (Ethernet Control Automation Technology) was originally developed for control and measurement applications
- Introduced in 2003, IEC standard since 2008
- Widely used in factory automation, test & measurement, process control
- Leading motion control network technology
- EtherCAT silicon from 13 different vendors
- EtherCAT controllers (“masters”) from 250+ suppliers

- The outstanding performance of EtherCAT, combined with low costs, flexibility, ease of use, openness and stability have led to wide adoption of the technology outside the original scope, including many scientific applications.

Proposal SWOT Analysis

Strengths

- Best in class performance and accuracy
- Low costs, stable technology, widely supported
- Open: standardized, used and accepted worldwide
- EtherCAT Technology Group (ETG) known for excellent support, ETG membership free of charge

Weaknesses

- EtherCAT is optimized for high update rates with small data amounts per node – not ideal for applications with few nodes that generate large data amounts, such as high res video data
- This is being addressed by EtherCAT G, a downward compatible extension expanding the bandwidth

Opportunities

- “Make or buy” – with EtherCAT both approaches are supported: implementing own EtherCAT devices is comparatively straightforward, but there are also commercial products available for almost every use case

Threats

- EtherCAT is open, standardized and everyone is invited to implement and use it: no other industrial Ethernet technology is so widely accepted. There is open-source software for EtherCAT, but the technology itself is not open source and thus not suitable for those who make this a requirement.

IPR Status & Contact Information

- EtherCAT is protected by IPR (to avoid an EtherRAT or -LION) and licensed under fair, reasonable and nondiscriminatory terms.
- Licensing follows the CAN (Controller Area Network) example: only the chip makers pay for the license (and thus finance ETG). EtherCAT device don't have to pay, and master licenses are free of charge. ETG membership and support is free of charge, too.
- Open Source EtherCAT software available, e.g.
  https://etherlab.org/en/ethercat/
  https://github.com/OpenEtherCATsociety/

- For further information, pls go to www.ethercat.org or contact

EtherCAT Technology Group
Ostendstr. 196
90482 Nuremberg, Germany
Phone +49 911 540 56 20

EtherCAT product guide:
https://www.ethercat.org/en/products.html
EtherCAT in 20min:
https://youtu.be/k4KufZR6XYs